HAL
open science

Sliding mode control for a shunt active filtering

R. Ameur, Maurice Fadel, Thierry Meynard

To cite this version:

R. Ameur, Maurice Fadel, Thierry Meynard. Sliding mode control for a shunt active filtering. Speedam 2002, Jun 2002, Ravello, Italy. hal-03538803

HAL Id: hal-03538803

https://ut3-toulouseinp.hal.science/hal-03538803v1

Submitted on 21 Jan 2022

HAL is a multi-disciplinary open access archive for the deposit and dissemination of scientific research documents, whether they are published or not. The documents may come from teaching and research institutions in France or abroad, or from public or private research centers.

L'archive ouverte pluridisciplinaire **HAL**, est destinée au dépôt et à la diffusion de documents scientifiques de niveau recherche, publiés ou non, émanant des établissements d'enseignement et de recherche français ou étrangers, des laboratoires publics ou privés.

Sliding mode control for a shunt active filtering

R.Ameur, M.Fadel, T.Meynard, INPT, UMR-CNRS 5828
LEEI 2, Rue Charles Camichel B.P. 7122, 31071 Toulouse CEDEX 7, France
Tel. : 05.61.58.82.00, Fax. : 05.61.63.88.75
e-mail : ameur@leei.enseeiht.fr, fadel@leei.enseeiht.fr, meynard@leei.enseeiht.fr
URL : http://www.leei.enseeiht.fr

Abstract— **In this paper, the authors present a new control strategy using the sliding mode of the multicell converters which allows the compensation of the current harmonics in medium voltage networks. The use of these converters in the applications of active filtering is interesting since these converters allow to increase the bandwith of the system while reducing the constraints on the components semiconductors.**

Keywords— **active filter, multicell converter, sliding mode control.**

Topic: T1 - Power electronics - converter control techniques.

I. Introduction

The introduction of multicell converters in power electronics systems opened new horizons in electrical engineering. This structure reduces the constraints on the semiconductors and reduces the share of reactive components. When a multicell converter with p cell is controlled using the same duty cycle on every cell and with a phase shift of $\frac{2\pi}{p}$ between adjoining cells the ripple frequency of the output is pf_d. Another interesting feature of this converter is the self balancing of the flying capacitors voltages [1].

In our case we focus our study on the compensation of the current harmonics in a low voltage network using shunt active filtering with a sliding mode control. Figure 1 illustrates the principle of compensation. The shunt active filter should inject the current harmonics demanded by the load so that in the network is a pure sine wave.

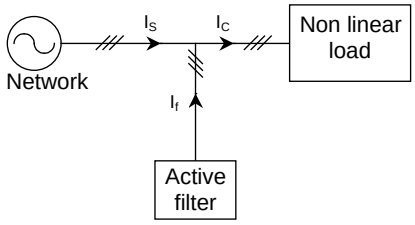

Fig. 1. Principle of shunt active filtering

II. The sliding mode control

A. Principle

The sliding mode control consists to force the trajectory of evolution of the state variables to converge towards a surface referred to as the "sliding surface". On this surface the order of the system is reduced and the trajectory of the variables of state slips up to the point of balance (fig. 4).

B. Design of the control law

The control strategy presented here is given by using the instantaneous model of the system. It is based on the principle of stability of Lyapunov.

Taking the case of a p cell chopper. The state equation of the system is $\dot{x} = Ax + G(x)u$. It is noted that the system is non-linear. The scalar function $V(x) = \frac{1}{2}\Delta x^T Q \Delta x$ is defined positively, its derivative is $\dot{V}(x) = \Delta x^T Q \Delta \dot{x}$. V represents the energy required to reach the point of balance. The stability criterion is given by the inequality (1) [2].

$$\Delta x^T Q G(x) \Delta u < 0 \tag{1}$$

with : $u = U_{eq} + \Delta u$

U_{eq} : equivalent control vectors ;

Δu : relates the saturation of the control;

Q : diagonal matrix containing reactive elements.

The p switching functions are defined to reach the point of balance asymptotically stable and verifying (1). They are given by (2).

$$s_i(x) = -\Delta x^T Q G(x) \tag{2}$$

In the case of a three-cell chopper (fig. 2), the instantaneous model of the system is given by (3).

$$\underbrace{\begin{pmatrix} \dot{i}_l \\ \dot{v}_{C1} \\ \dot{v}_{C2} \end{pmatrix}}_{\dot{\mathbf{x}}} = \underbrace{\begin{pmatrix} -\frac{R}{L} & 0 & 0 \\ 0 & 0 & 0 \\ 0 & 0 & 0 \end{pmatrix}}_{\mathbf{A}} \underbrace{\begin{pmatrix} i_l \\ v_{C1} \\ v_{C2} \end{pmatrix}}_{\mathbf{x}} +$$

$$\underbrace{\begin{pmatrix} \frac{v_{C_1}}{L} & \frac{v_{C_2}-v_{C_1}}{L} & \frac{E-v_{C_2}}{L} \\ -\frac{i_l}{C_1} & \frac{i_l}{C_1} & 0 \\ 0 & -\frac{i_l}{C_2} & \frac{i_l}{C_2} \end{pmatrix}}_{\mathbf{G(x)}} \underbrace{\begin{pmatrix} u_1 \\ u_2 \\ u_3 \end{pmatrix}}_{\mathbf{U}} \tag{3}$$

The switching functions obtained with a three-cell converter are given by (4).

$$s_i : \begin{cases} s_1 = 3i_{ref}\frac{v_{C_1}}{E} - i_l \\ s_2 = 3i_{ref}\frac{v_{C_2}-v_{C_1}}{E} - i_l \\ s_3 = 3i_{ref}\frac{E-v_{C_2}}{E} - i_l \end{cases} \tag{4}$$

To establish these switching functions, the control δu_i has to be positive when s_i is positive. To limit the switching frequency, a hysteresis function is introduced with a width of 2ϵ.

$$u_i : \begin{cases} 1 & s_i > \epsilon \\ 0 & s_i < -\epsilon \end{cases} \tag{5}$$

The figure (4) represents the three sliding surfaces and the evolution of the state variables in the plan (v_{c1}, v_{c2}, i_l). There are three operating modes, the reaching mode ($A \rightarrow$B), the sliding on a surface ($B \rightarrow$C) where the state variables are reduced to 2 and finally the sliding on a line to reach the point of balance ($C \rightarrow$D).

In order to operate with fixed frequency, a modulator is inserted. The connection between the switching functions

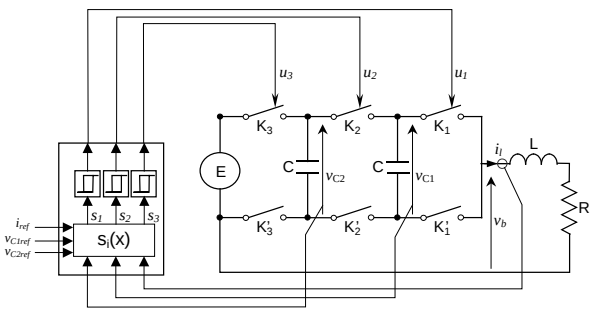

Fig. 2. Three-cell chopper with a sliding mode control at variable frequency

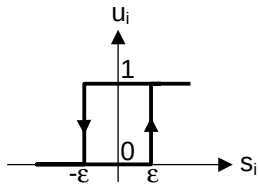

Fig. 3. fonction hysteresis function to limit the switching frequency

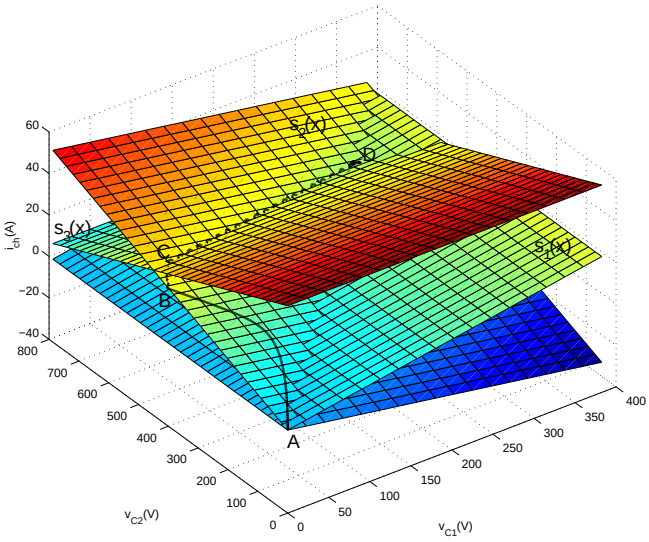

Fig. 4. Evolution of the state variables following the surfaces of slide for three cells chopper

and this modulator is done with a PI regulator and a filter (fig. 5).

The simulation results are represented on the figure (6). The amplitude current reference is $20A$ and a frequency of $1kHz$. The load current follows correctly the current reference by ensuring a self balancing of flying capacitors voltages. We can note the existence of a certain shift phase in an operation at fixed switching frequency due to the modulator. Indeed the expression of phase shift between the input and the output for a PWM control signal is given by the equation (6) [4].

$$\Delta\phi = \frac{\pi}{2}\frac{f_m}{f_d} \tag{6}$$

f_m: frequency of the signal of input.

f_d: switching frequency.

Measured shift phase is of 6.50° degree, that given by the expression (6) is of 5.62° degree.

III. Sliding mode control in three-phase current

In the case of three-phase inverters, two structures of control are developed: interactiv control and non-interactiv control. The no-interactiv control presents good dynamics performances compared to the intercative control.

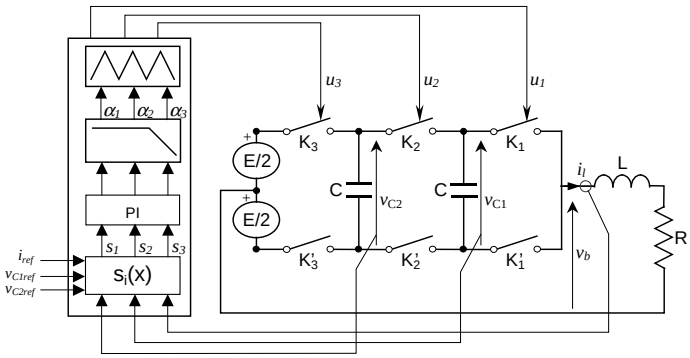

Fig. 5. Three-cell converter with the sliding mode control with fixed frequency

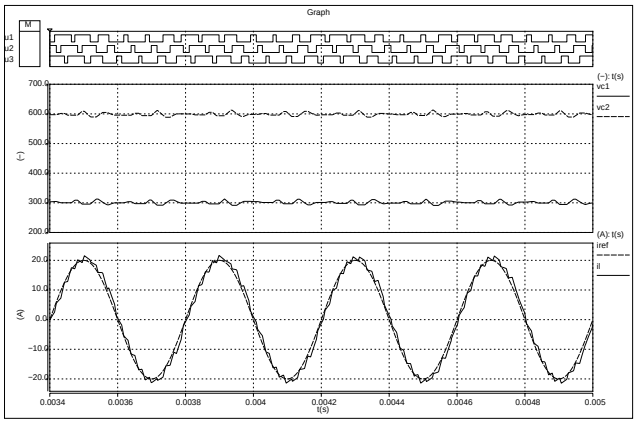

Fig. 6. Simulation at fixed frequency with a reference of 20A and 1kHz

The no-interactiv control consists to insert three legs side by side for make the three-phase inverter. The ordering of three legs is identical, the same control block described for the single phase inverter is used. This control strategy does not take account of the interaction between the legs.

A. Variable frequency control

Each control block is made of three "block of hysteresis" to obtain the control law. A simulation with a current reference of $20A$ and a frequency of $4.5kHz$ is represented by the figure (8). The average frequency of commutations of the switches is equal to the one of the current reference and is equal to the bandwidth of this control law. The converter has reached its dynamic limit which depends on the characteristics of the load. The self balancing of the flying capacitors voltage is always assured.

If the frequency of the reference exceeds the desired bandwidth the control is saturated, and commutations of the switches are done at a same time giving a two-level output voltage waveform.

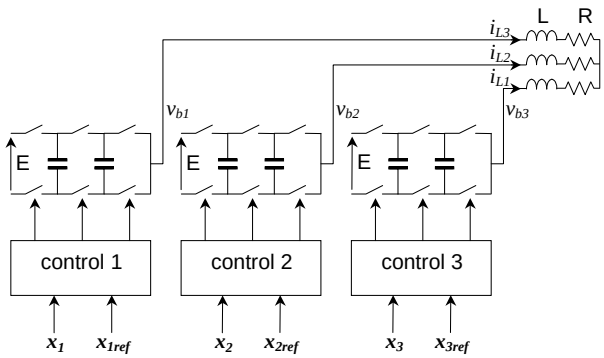

Fig. 7. No-interactiv sliding mode control

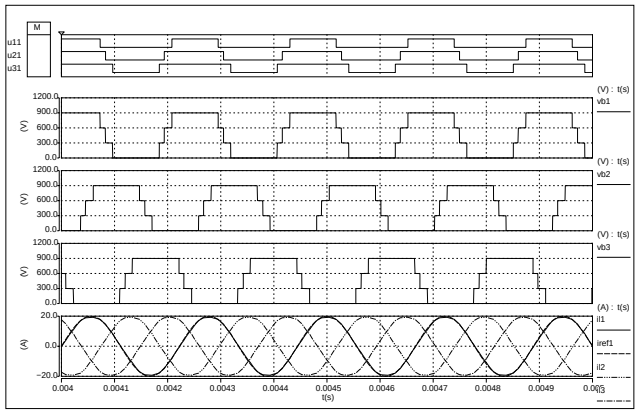

Fig. 8. Current and voltage for variable frequency control with $I_m = 20A$ and $f_m = 4.5kHz$

B. Fixed frequency control

Operation at fixed frequency in a three-phase inverter degrades considerably the phase-shift between the real and the desired currents in the load. Indeed for a current reference of $4.5kHz$ there is a phase-shift of 16.2° in simulation, with an attenuation of 10%. The switching frequency is egal to ($f_d = 16kHz$). The Figure (10) represents the currents for an operation at fixed switching frequency.

IV. Active filtering on network low tension

The control system of the active filter is composed of two parts, the calculation of the harmonic currents and the generation of the control signals for the inverter using the sliding mode control.

A. Calculation of the harmonic currents

There are several algorithms for the extraction of the current harmonics. The method generally used is the method of the power pq. It allows to establish the components $i_{ref\alpha}$ and $i_{ref\beta}$ either for compensations of harmonics or for a compensation reactive power [5].

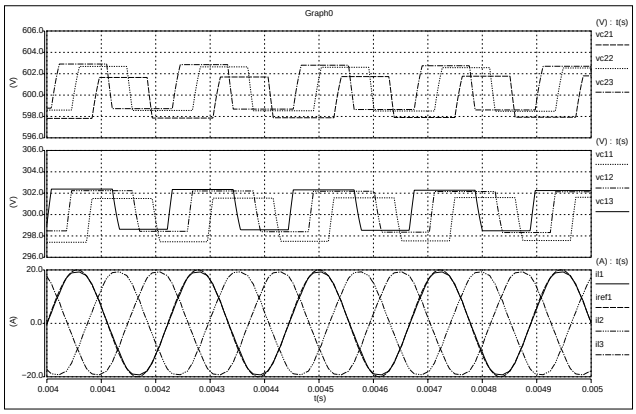

Fig. 9. Voltage balancing of the three legs

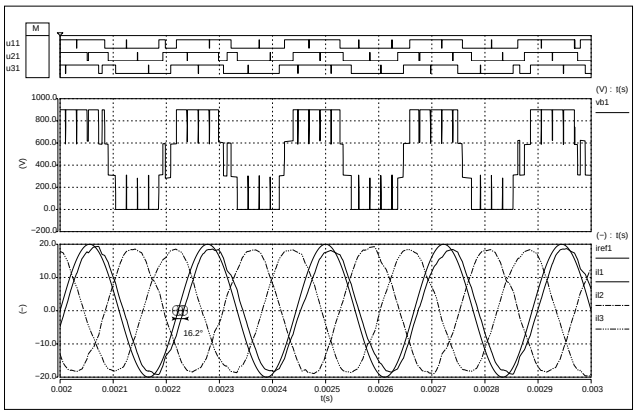

Fig. 10. Fixed frequency control with $I_m = 20A$ and $f_m = 4.5kHz$

$$\begin{pmatrix} p \\ q \end{pmatrix} = \begin{pmatrix} v_{s\alpha} & v_{s\beta} \\ -v_{s\beta} & v_{s\alpha} \end{pmatrix} \begin{pmatrix} i_{c\alpha} \\ i_{c\beta} \end{pmatrix} \tag{7}$$

$$\begin{pmatrix} i_{ref\alpha} \\ i_{ref\beta} \end{pmatrix} = \frac{1}{v_{s\alpha}^2 + v_{s\beta}^2} \begin{pmatrix} v_{s\alpha} & -v_{s\beta} \\ -v_{s\beta} & v_{s\alpha} \end{pmatrix} \begin{pmatrix} p_{ref} \\ q_{ref} \end{pmatrix} \tag{8}$$

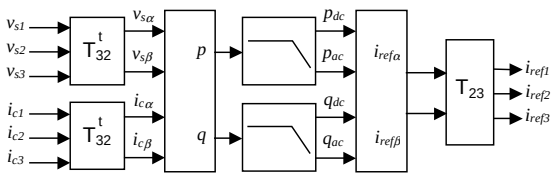

Fig. 11. General scheme for reference current identification

For a current harmonics compensation and to have a regulation of the DC capacitor voltage, we must impose $p_{ref} = p_{ac} - p_{Cdc}$ and $q_{ref} = q_{ac}$.

p_{Cdc} corresponds to the losses in the active filter.

V. Results of simulation

The results of simulation are obtained for a low voltage network of $220V$. A bridge rectifier is regarded as the polluting load as seen on figure (15), it absorbs a power of $6kW$.

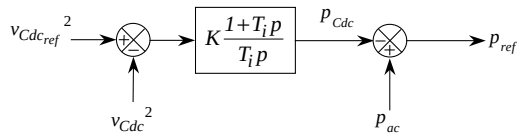

Fig. 12. scheme of DC voltage regulation

Network	V_s	$220V$
	L_s	$650\mu H$
Active filter	C_{dc}	$100\mu F$
	L_f	$350\mu H$
Load	R_{ch}	20Ω
	L_{ch}	$1mH$
	L_c	$350\mu H$

Fig. 13. Parameters of the shunt active filter, network and load

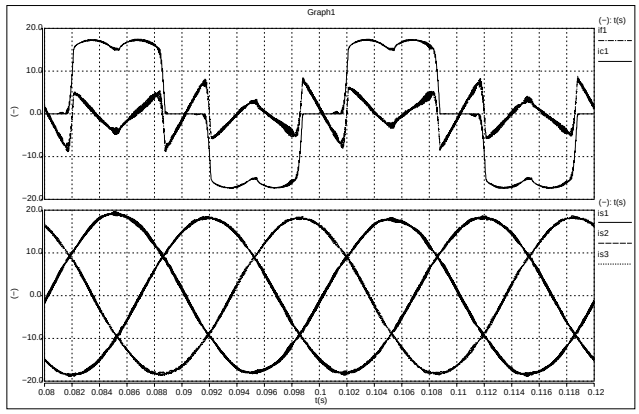

Fig. 14. a)-Load current and harmonic current of the first phase, b)-source currents

The comparisons are made under the same operating conditions. The THD is decreased from 25.97% without active filter to 2.23% with active filter using sliding mode control (Fig. 16 and 17).

VI. Conclusions

The multicell converters by its dynamic performances makes it possible to cancel harmonics of high row and to obtain good performances. The sliding mode control at fixed frequency has a good bandwidth and it makes it possible to have a good compensation of current harmonics.

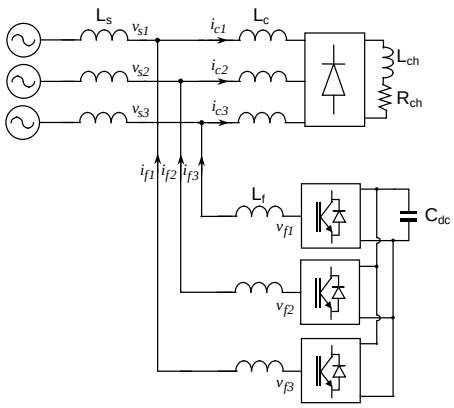

Fig. 15. Principale scheme of shunt active filter

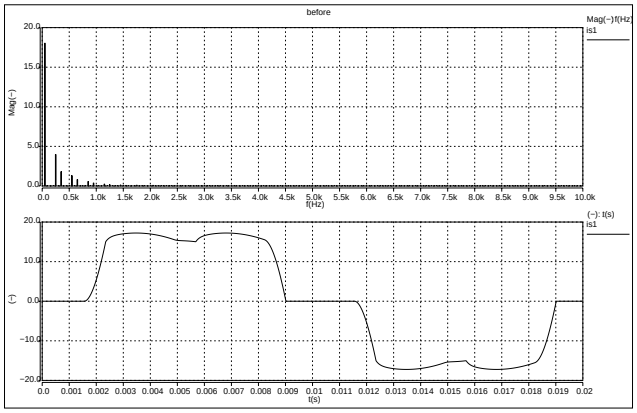

Fig. 16. Source current and spectrum waves before filtering

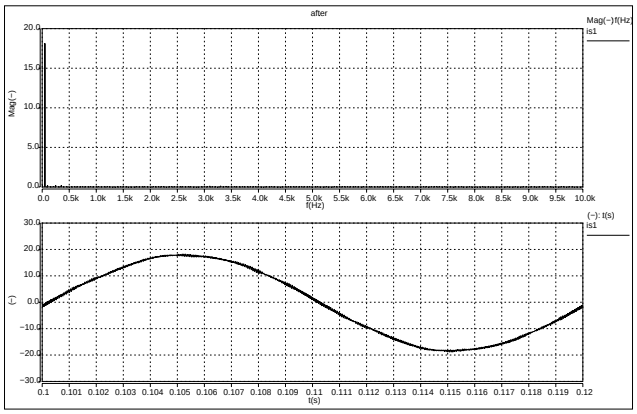

Fig. 17. Source current and spectrum waves after filtering

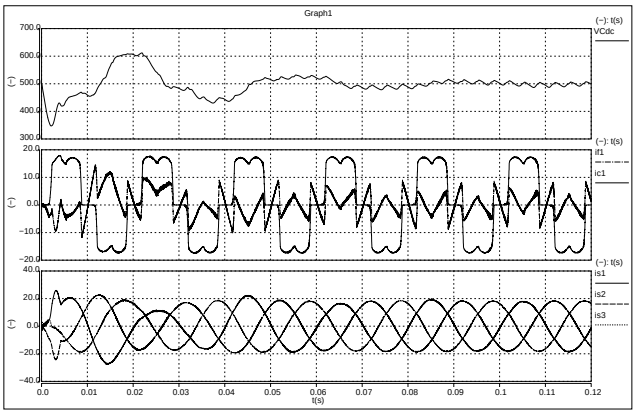

Fig. 18. Regulation of DC voltage

References

[1] T.Meynard, Performances dynamiques des convertisseurs multi-niveaux, *revue internationale de génie électrique, volume 1-No. 1/1998, pages 37,52.*

[2] D.Pinon, Commandes des convertisseurs multicellulaire par mode de glissement, *thése de doctat*, INP Toulouse, 2000.

[3] Marian P.Kazmierkowski ans Waldemar Sulkowski A novel vector control scheme for transistor PWM inverter-fed induction motor drive, *IEEE transactions on industrial electronics, VOL. 38 Nø 1, February 1991*,.

[4] Geoof Walker *Bandwidth Considerations for Multilevel Converters*, IEEE Transactions on Power Electronics, Vol. 14, No. 1, Junary 1999.

[5] A.Nava-Segura, *A detailled Instantaneous Harmonic and Reactve Compensation Analysis of Three-Phase AD/DC converter, in abc and $\alpha\beta$ coordonates*, IEEE Transactions on Power Delivery, Vol. 14, No. 13, Jyly 1999.

[6] Jianhong XU, Filtrage actif parrallèle des harmoniques de réseaux de distribution d'éléctricité, *thèse de doctat*, INP Lorraine, 1994.

[7] S.Guffon, A.Sariñana, S.Bacha and J.Davoine, *Sliding mode control for active filtring with improvement of the high frequency range spectrum*, EPE 99, Laussane.